MAGIC-PRO

HT13 Series Straight-sided Drawer System
(High Drawer: C Height)

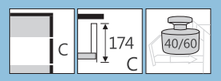

DTC
Global Quality Benchmark

PRODUCT

DESCRIPTION

- Concealed, full extension
- Dynamic load capacity: 40/60kg
- Tool free assembly and removal of drawer
- Silent system guarantees smooth run without noise
- 3D adjustment: Up & down adjustment: ± 2mm, left & right adjustment:± 1.5mm, tilt adjustment:+1.5,-2.5mm
- Finish: Silk white(E29), Grey matt(E30), Gloss white(E32), Stainless steel(F04)

SPACE REQUIREMENT

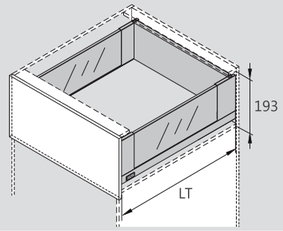

LT=Internal Cabinet Depth
LT=NL+3

HIGH DRAWER WITH GLASS-BOXSIDE FOR WOOD DRAWER BACK

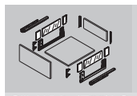

Kit Package

Silk White(E29)! Grey Matt(E30)! Stainless Steel(F04)

NL	Soft Close item No.	Push-open item No.	Soft-close+ Push-open item No.	Set/ctn
270mm	HT132704A12	HT432704A12		1
300mm	HT133004A12	HT433004A12		1
350mm	HT133504A12	HT433504A12	HT533504A12	1
400mm	HT134004A12	HT434004A12	HT534004A12	1
450mm	HT134504A12	HT434504A12	HT534504A12	1
500mm	HT135004A12	HT435004A12	HT535004A12	1
550mm	HT135504A12	HT435504A12	HT535504A12	1
600mm	HT136004A12	HT436004A12	HT536004A12	1

1

Slides (left/right) /Industrial Package

Pre-zinc Steel(F02)

NL	Soft Close item No.	Push-open item No.	Soft-close+ Push-open item No.	Set/ctn
270mm	HT102704H	HT402704H		5
300mm	HT103004H	HT403004H		5
350mm	HT103504H	HT403504H	HT503504H	5
400mm	HT104004H	HT404004H	HT504004H	5
450mm	HT104504H	HT404504H	HT504504H	5
500mm	HT105004H	HT405004H	HT505004H	5
550mm	HT105504H	HT405504H	HT505504H	5
600mm	HT106004H	HT406004H	HT506004H	5

2

Drawer Sides and Cover Caps (left/right) /Industrial Package

Silk White(E29)! Grey Matt(E30)! Stainless Steel(F04)

NL	Item No.	Set/ctn
270mm	HT132702	5
300mm	HT133002	5
350mm	HT133502	5
400mm	HT134002	5
450mm	HT134502	5
500mm	HT135002	5
550mm	HT135502	5
600mm	HT136002	5

15

10mm Glass-boxside (left/right) /Industrial Package

Glass(G01)! Ground Glass(G02)! Figured Glass(G03)

NL	Item No.	Set/ctn
270mm	HT13061270	10
300mm	HT13061300	10
350mm	HT13061350	10
400mm	HT13061400	10
450mm	HT13061450	10
500mm	HT13061500	10
550mm	HT13061550	10
600mm	HT13061600	10

3

Back Fixing-brackets (left/right)/ Industrial Package

Silk White(E29)! Grey Matt(E30)! Chrome Plated(C01)

Item No.	HT13031
Set/ctn	60

30

Rod for Push-open Synchronization / Industrial Package

For Push-open drawer or Soft Close+Push-open drawer

Item No.	HT0FH02
Set/ctn	60

Size:1100mm. Cutting: Internal cabinet width LW-172

4

Front Fixing-brackets (left/right) / Industrial Package

Zinc Plated(B01)

	Item No.	Set/ctn
Screw-on	TB03011	120
Press-in	TB03016	120

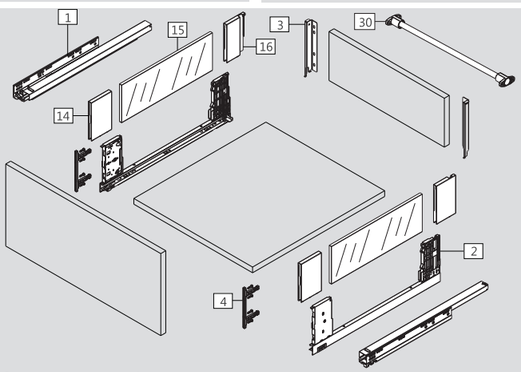

Glass-boxside, rod for push-open synchronization not included in the kit

PLANNING

Installation Dimensions(mm)

NL=Nominal Slide Length
LT=Internal Cabinet Depth
LT=NL+3

Standard drawer

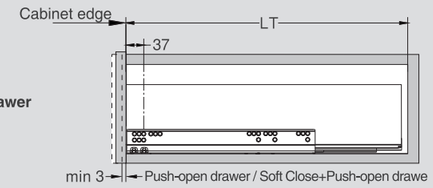

Cabinet Configuration

Cabinet widths/KB(mm)	Soft close drawer Stabilizer	Push-open drawer Synchronization rod
300	–	○
350	–	○
400	–	○
450	–	○
500	–	○
600	–	○
800	○	●
900	○	●
1000	○	●
1200	○	●

– not recommended
○ recommended
● strongly recommended

Screw Positions of the Slides(mm)

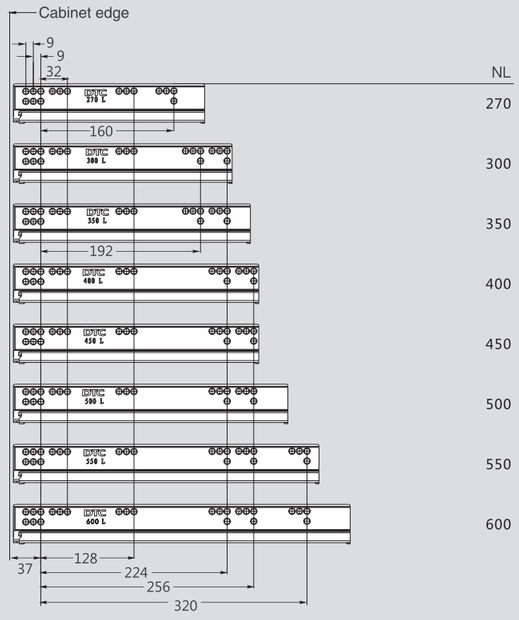

14

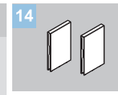

Front Adapter (left/right) / Industrial Package
Silk White(E29)! Grey Matt(E30)! Stainless Steel(F04)

Item No.	HT13063
Set/ctn	60

16

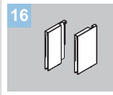

Front Adapter (left/right) / Industrial Package
Silk White(E29)! Grey Matt(E30)! Stainless Stainless Steel(F04)

Item No.	HT13064
Set/ctn	60

Installation Dimensions(mm)

LW=Internal Cabinet Width

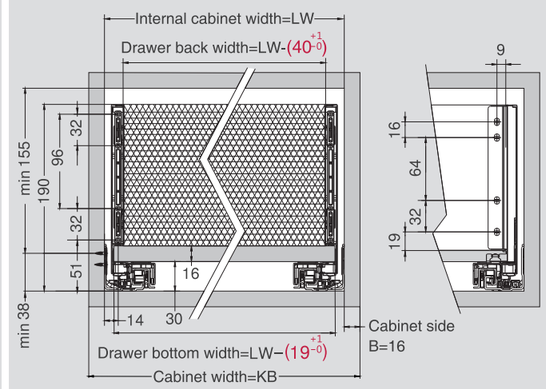

Drawer Front, Back and Bottom Dimensions(mm)

Drawer front

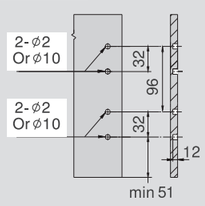

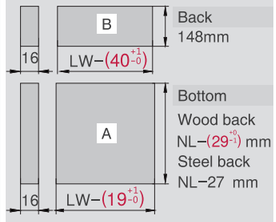

KB Cabinet width
LW Internal cabinet width
NL Nominal length

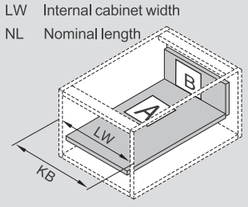

Glass Front Dimensions(mm)

10mm Glass-boxside

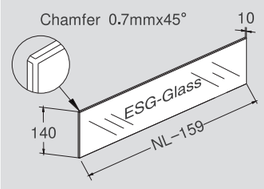

DOUBLE-WALL DRAWER SYSTEMS